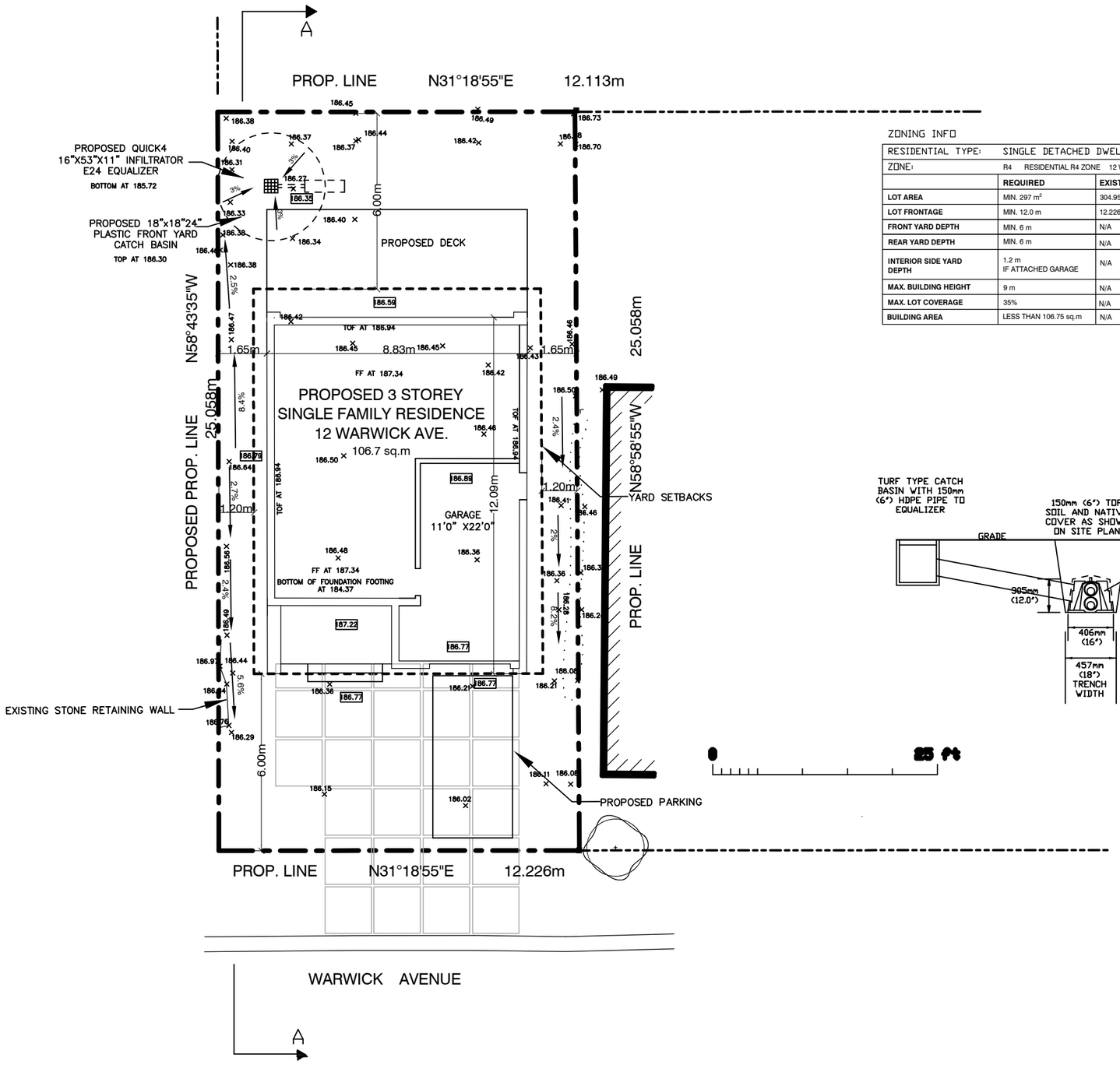

ZONING INFO

RESIDENTIAL TYPE:	SINGLE DETACHED DWELLING UNIT		
ZONE:	R4 RESIDENTIAL R4 ZONE 12 WARWICK AVE, GRANDBEND, ONTARIO		
	REQUIRED	**EXISTING**	**PROPOSED**
LOT AREA	MIN. 297 m^2	304.95 m^2	SAME AS EXIST.
LOT FRONTAGE	MIN. 12.0 m	12.226 m	SAME AS EXIST.
FRONT YARD DEPTH	MIN. 6 m	N/A	6 m
REAR YARD DEPTH	MIN. 6 m	N/A	9.341 m
INTERIOR SIDE YARD DEPTH	1.2 m IF ATTACHED GARAGE	N/A	1.2 m
MAX. BUILDING HEIGHT	9 m	N/A	9 m
MAX. LOT COVERAGE	35%	N/A	34.98%
BUILDING AREA	LESS THAN 106.75 sq.m	N/A	106.7 sq.m

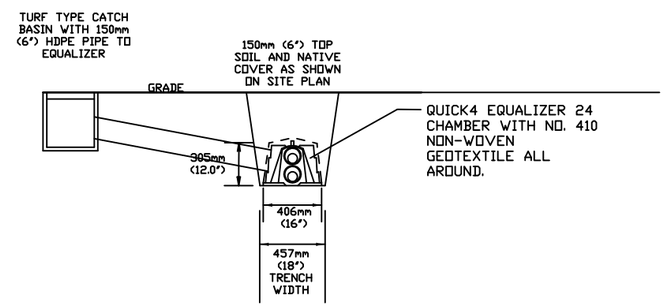

KEYPLAN:

NOTES

1. DO NOT SCALE FROM THIS DRAWING
2. ALL DIMENSIONS ARE TO BE CHECKED ON SITE
3. THIS DRAWING IS TO BE READ IN CONJUNCTION WITH ALL RELEVANT SPECIFICATIONS, ARCHITECTURAL, STRUCTURAL, MECHANICAL, AND ELECTRICAL DRAWINGS

LEGEND

No.	DATE	NAME	DESCRIPTION
1	NOV.3.2021	CH	ELEVATIONS AND PROPOSALS

REVISIONS

JOHNSON
ENGINEERING
CONSULTANTS
STRUCTURAL – CIVIL – MUNICIPAL
STRATFORD
368 HURON STREET, STRATFORD, ONTARIO
N5A 5T5 FAX (519) 271-5353
http://www.jecinc.on.ca
(519) 271-9923
jecinc@jecinc.on.ca

CLIENT:
SIMPLY PARADISE INTERIOR DESIGN INC.
17 ELBER ROAD
GRAND BEND ON
NOM 1T0

AUTHORITY:
THE MUNICIPALITY OF LAMBTON SHORES

PROJECT:
12 WARWICK AVE. GRAND BEND

DRAWING TITLE:
SITE PLAN OF 12 WARWICK AVE. GRAND BEND

SCALE: 1:75
DATE: OCT. 30, 2021
DESIGNED BY: BRIAN JOHNSON
DRAWN BY: CH
J.E.C. FILING No: 2021104
FILING LOCATION:

APPROVED BY:
LICENSED PROFESSIONAL ENGINEER
NOV.22,2021
B. D. JOHNSON
PROVINCE OF ONTARIO

DWG. No. A1
SHEET No. 1/1

© COPYRIGHT 2021 JOHNSON ENGINEERING CONSULTANTS INC.
NO UNAUTHORIZED USE, AUTHORIZED USE ONLY BY BRITISH COLUMBIA

NOV. 3, 2021 – Dwg Name: SIMPLY PARADISE INTERIOR DESIGNS INC– Grand Bend – 24x36 Border – updated by CH